* 0000800000001 *

Cambridge Assessment International Education

Cambridge International AS & A Level

CANDIDATE NAME

CENTRE NUMBER

CANDIDATE NUMBER

T9015081

PHYSICS **9702/33**

Paper 3 Advanced Practical Skills 1 **February/March 2025**

2 hours

You must answer on the question paper.

You will need: The materials and apparatus listed in the confidential instructions

INSTRUCTIONS

- Answer **all** questions.
- Use a black or dark blue pen. You may use an HB pencil for any diagrams or graphs.
- Write your name, centre number and candidate number in the boxes at the top of the page.
- Write your answer to each question in the space provided.
- Do **not** use an erasable pen or correction fluid.
- Do **not** write on any bar codes.
- You will be allowed to work with the apparatus for a maximum of 1 hour for each question.
- You should record all your observations in the spaces provided in the question paper as soon as these observations are made.
- You may use a calculator.
- You should show all your working and use appropriate units.

INFORMATION

- The total mark for this paper is 40.
- The number of marks for each question or part question is shown in brackets [ ].

For Examiner's Use	
1	
2	
Total	

This document has **12** pages. Any blank pages are indicated.

© UCLES 2025

[Turn over

BLANK PAGE

DO NOT WRITE IN THIS MARGIN
DO NOT WRITE IN THIS MARGIN
DO NOT WRITE IN THIS MARGIN
DO NOT WRITE IN THIS MARGIN
DO NOT WRITE IN THIS MARGIN

You may not need to use all of the materials provided.

1 In this experiment, you will investigate an electrical circuit.

(a) • Connect the circuit shown in Fig. 1.1.
E, F, G and H are crocodile clips.

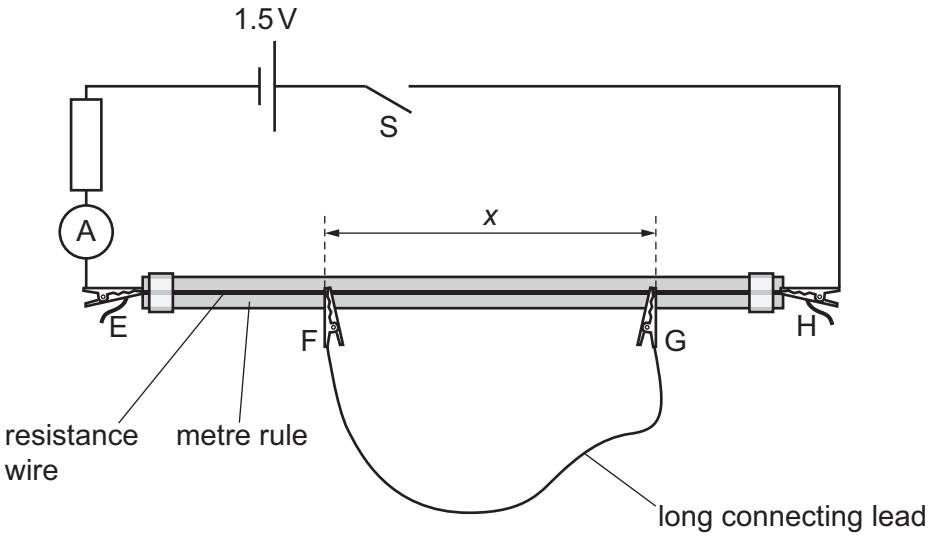

Fig. 1.1

• Using the long connecting lead, clip crocodile clips F and G on the resistance wire so that they are approximately 0.45 m apart.

• The length of resistance wire between F and G is x.
Measure and record x.

x = ... m

• The current in the circuit is I.
Close S and record I.

I = ... A

• Open S.

[2]

DO NOT WRITE IN THIS MARGIN
DO NOT WRITE IN THIS MARGIN
DO NOT WRITE IN THIS MARGIN
DO NOT WRITE IN THIS MARGIN
DO NOT WRITE IN THIS MARGIN

(b) Change x and record x and I.
Repeat until you have six sets of values of x and I.

Record your results in a table. Include values of $\frac{1}{I}$ in your table.

[9]

(c) **(i)** Plot a graph of $\frac{1}{I}$ on the y-axis against x on the x-axis. [3]

(ii) Draw the straight line of best fit. [1]

(iii) Determine the gradient and y-intercept of this line.

gradient = ...

y-intercept = ...
[2]

DO NOT WRITE IN THIS MARGIN
DO NOT WRITE IN THIS MARGIN
DO NOT WRITE IN THIS MARGIN
DO NOT WRITE IN THIS MARGIN
DO NOT WRITE IN THIS MARGIN

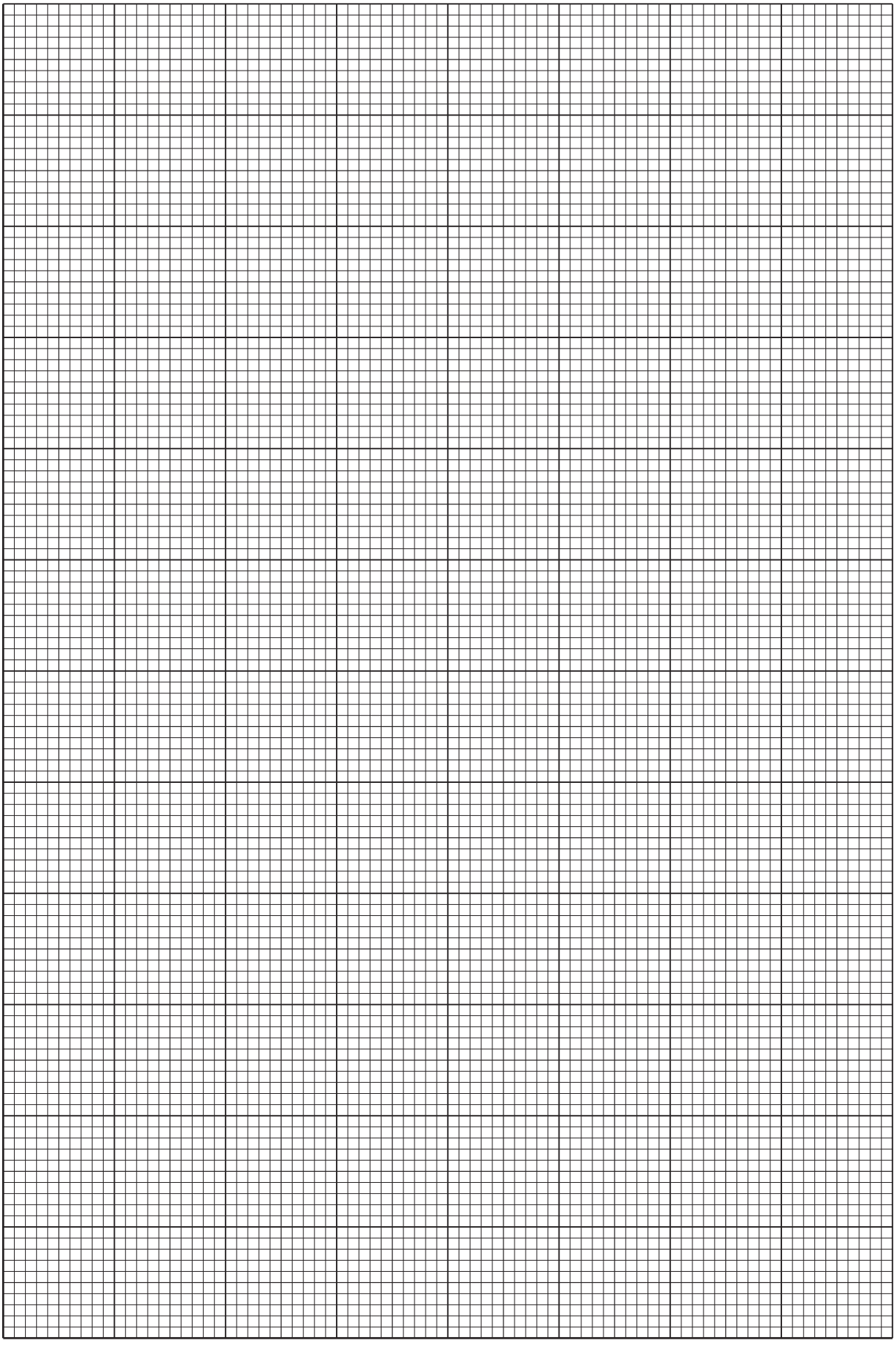

DO NOT WRITE IN THIS MARGIN
DO NOT WRITE IN THIS MARGIN
DO NOT WRITE IN THIS MARGIN
DO NOT WRITE IN THIS MARGIN
DO NOT WRITE IN THIS MARGIN

(d) It is suggested that the quantities I and x are related by

$$\frac{1}{I} = ax + b$$

where a and b are constants.

Using your answers in **(c)(iii)**, determine the values of a and b.
Give appropriate units.

a = ...

b = ...
[2]

(e) Theory suggests that

$$a = -\frac{P}{Q}$$

where P is the resistance per unit length of the resistance wire and Q is 1.5 V.

Use your value of a to calculate the value of P.

P = ... $\Omega\,m^{-1}$ [1]

[Total: 20]

DO NOT WRITE IN THIS MARGIN
DO NOT WRITE IN THIS MARGIN
DO NOT WRITE IN THIS MARGIN
DO NOT WRITE IN THIS MARGIN
DO NOT WRITE IN THIS MARGIN

BLANK PAGE

DO NOT WRITE IN THIS MARGIN
DO NOT WRITE IN THIS MARGIN
DO NOT WRITE IN THIS MARGIN
DO NOT WRITE IN THIS MARGIN
DO NOT WRITE IN THIS MARGIN

You may not need to use all of the materials provided.

2 In this experiment, you will investigate the thermal properties of plastic pipe.

(a) • You are provided with two lengths of plastic pipe.

• Select one of them and, using the waterproof pen, label one end A.

• Make a mark approximately 12 cm from end A, as shown in Fig. 2.1.

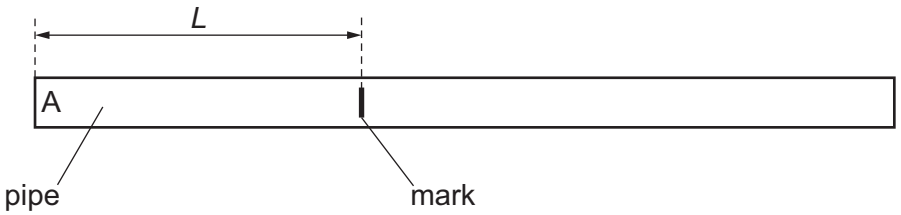

Fig. 2.1

• The distance from end A to the mark is L, as shown in Fig. 2.1.
Measure and record L.

L = ...

• Use the thermometer to measure the room temperature T_0.
Record T_0.

T_0 = ...°C
[2]

(b) (i) • Set up the apparatus as shown in Fig. 2.2.
The point Z is the lower edge of the end of the wooden strip.

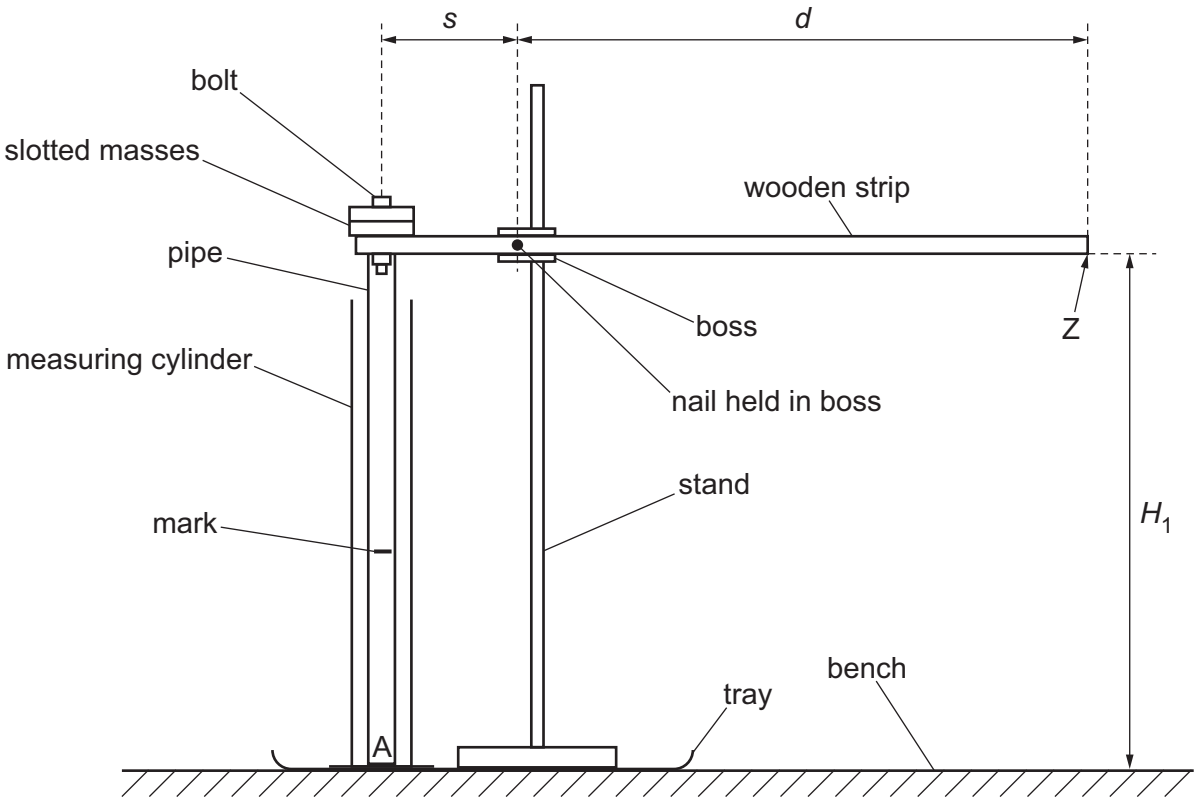

Fig. 2.2

DO NOT WRITE IN THIS MARGIN
DO NOT WRITE IN THIS MARGIN
DO NOT WRITE IN THIS MARGIN
DO NOT WRITE IN THIS MARGIN
DO NOT WRITE IN THIS MARGIN

- Ensure that end A is at the bottom of the measuring cylinder.
- The distance between the centre of the bolt and the centre of the nail is *s*.
  The distance between the centre of the nail and the end of the wooden strip is *d*, as shown in Fig. 2.2.
- Measure and record *s* and *d*.

s = ...

d = ...
[1]

(ii)
- The distance from the bench to Z is H_1, as shown in Fig. 2.2.
  Measure and record H_1.

H_1 = ...

- Slowly and carefully pour very hot water into the measuring cylinder until the water level reaches the mark on the pipe.
  The distance between the bench and Z will change. When Z reaches its lowest position the new distance from the bench to Z is H_2.
  Measure and record H_2.

H_2 = ...

- The temperature of the water in the measuring cylinder is *T*.
  Measure and record *T*.

T = ...°C
[2]

(iii)
- Calculate $H_1 - H_2$.

$H_1 - H_2$ = ...

- Estimate the percentage uncertainty in your value of $H_1 - H_2$.
  Show your working.

percentage uncertainty = ... %
[1]

(iv)
- Calculate ΔL where $\Delta L = \dfrac{s(H_1 - H_2)}{d}$.

ΔL = ... [1]

DO NOT WRITE IN THIS MARGIN
DO NOT WRITE IN THIS MARGIN
DO NOT WRITE IN THIS MARGIN
DO NOT WRITE IN THIS MARGIN
DO NOT WRITE IN THIS MARGIN

(c) (i) • Remove the pipe from the measuring cylinder and empty the water into the beaker.

• Select the other pipe and label one end of this pipe B. Make a mark approximately 19 cm from end B.

• Measure and record the value of L for this pipe.

L = ... [1]

(ii) • Place this pipe in the measuring cylinder as shown in Fig. 2.2.

• Ensure that end B is at the bottom of the measuring cylinder.

• Repeat **(b)(ii)** and **(b)(iv)**.

H_1 = ...

H_2 = ...

T = ...°C

ΔL = ...
[2]

DO NOT WRITE IN THIS MARGIN
DO NOT WRITE IN THIS MARGIN
DO NOT WRITE IN THIS MARGIN
DO NOT WRITE IN THIS MARGIN
DO NOT WRITE IN THIS MARGIN

(d) It is suggested that ΔL, L, T and T_0 are related by

$$\Delta L = kL(T - T_0)$$

where k is a constant.

Using your data, calculate two values for k.

first value of k = ...

second value of k = ...
[1]

(e) It is suggested that the percentage uncertainty in the values of k is 30%.
Using this uncertainty, explain whether your results support the relationship in **(d)**.

.....

.....

.....

..... [1]

DO NOT WRITE IN THIS MARGIN
DO NOT WRITE IN THIS MARGIN
DO NOT WRITE IN THIS MARGIN
DO NOT WRITE IN THIS MARGIN
DO NOT WRITE IN THIS MARGIN

(f) (i) Describe **four** sources of uncertainty or limitations of the procedure for this experiment. For any uncertainties in measurement that you describe, you should state the quantity being measured and the reason for the uncertainty.

1 .....

.....

2 .....

.....

3 .....

.....

4 .....

.....

[4]

(ii) Describe **four** improvements that could be made to this experiment. You may suggest the use of other apparatus or different procedures.

1 .....

.....

2 .....

.....

3 .....

.....

4 .....

.....

[4]

[Total: 20]

DO NOT WRITE IN THIS MARGIN

DO NOT WRITE IN THIS MARGIN

DO NOT WRITE IN THIS MARGIN

DO NOT WRITE IN THIS MARGIN

DO NOT WRITE IN THIS MARGIN

Permission to reproduce items where third-party owned material protected by copyright is included has been sought and cleared where possible. Every reasonable effort has been made by the publisher (UCLES) to trace copyright holders, but if any items requiring clearance have unwittingly been included, the publisher will be pleased to make amends at the earliest possible opportunity.

To avoid the issue of disclosure of answer-related information to candidates, all copyright acknowledgements are reproduced online in the Cambridge Assessment International Education Copyright Acknowledgements Booklet. This is produced for each series of examinations and is freely available to download at www.cambridgeinternational.org after the live examination series.

Cambridge Assessment International Education is part of Cambridge Assessment. Cambridge Assessment is the brand name of the University of Cambridge Local Examinations Syndicate (UCLES), which is a department of the University of Cambridge.